Chicago Pneumatic

CP86100 & CP86101
Model C
Hydraulic Press, Frame

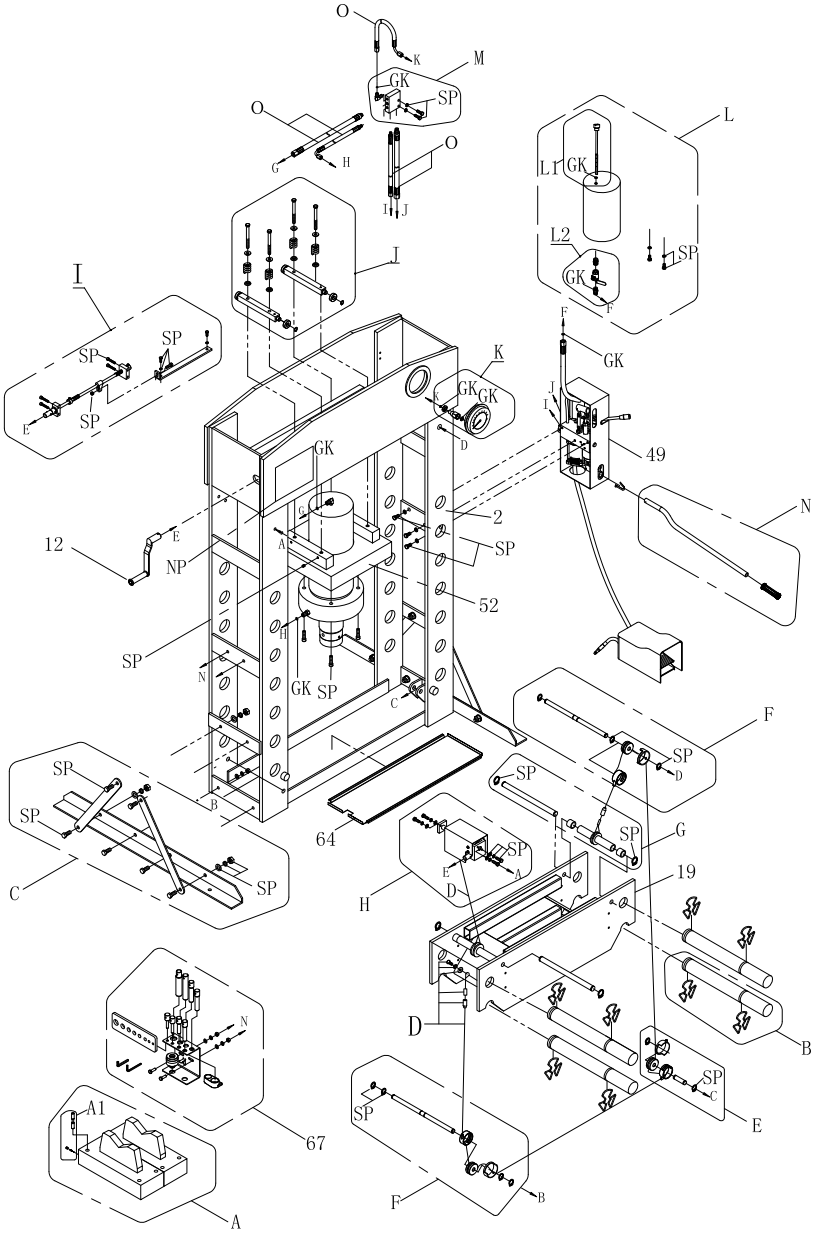

Index No.	Parts No.	Description	Qty.
01	8950321990	Cylinder Complete	1
02		Frame	1
12	8950312169	Handle	1
19	8950312172	Table	1
49	8950321998	Pump Complete	1
52	8950312185	Plate	1
64	8950300413	Cover	1
67	8955000050	Punch Kit	1
A	8950312214	V- Block Set (2)	1
A1	8950312215	Pin Kit	8
B	8950312216	Pin Kit	4
C	8950312217	Foot Kit	2
D	8950312218	Rope Kit	1
E	8950311785	Pulley Complete	1
F	8950312219	Pulley Complete	2
G	8950312220	Pulley Complete	2

Index No.	Parts No.	Description	Qty.
GK	8950322020	Gasket Kit	1
H	8950312221	Winch Kit	1
I	8950312222	Ram Moving Kit	1
J	8950312223	Slide Kit	1
K	8950322021	Gauge Kit	1
L	8950322022	Tank Kit	1
L1	8940175292	Plug Kit	1
L2	8950322023	Tap Complete	1
M	8950322024	Manifold Kit	1
N	8950312224	Handle Complete	1
NP	8940172905	Nameplate	1
O	8950322025	Hose Kit	1
SP	8950380043	Small Parts Kit	1

	8940170883	Safety Instructions	1
	8940172935	Operator's Manual	1
	8940172905	Warning Label	1

Recommended Accessories

8955000050 Press Bolt Set

8940173459 Protective Net

Spare parts without part number are not sold separately
Contact us at www.cp.com

09/2020
8940172927 rev. 03